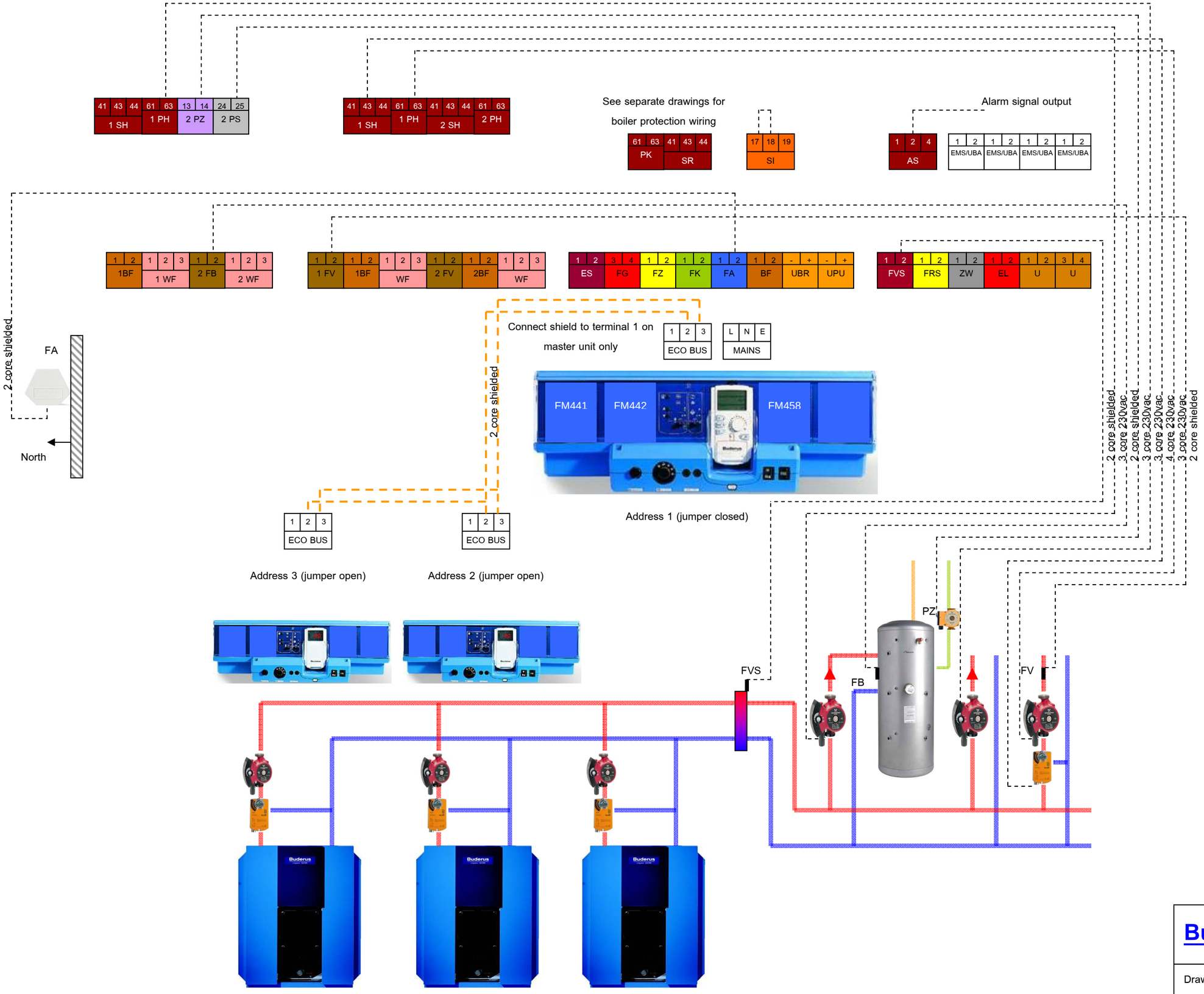

Buderus

Drawing No 4321-3-1-1-2 Revision date 8/2010

4321 and 4322 controllers, with FM458 controlling 3 boilers, DHW, 1 unmixed heating circuit and 1 mixed heating circuits